Power Physics Pro 2021

DC Circuits

Tutor Young
+65 90461609
www.powerphysics.com.sg

2020 Prelim ACJC

Three identical resistors of resistance 10 Ω are connected in series with a constant voltage supply *E*. The reading on an ideal voltmeter connected across R_2 is 5.0 V.

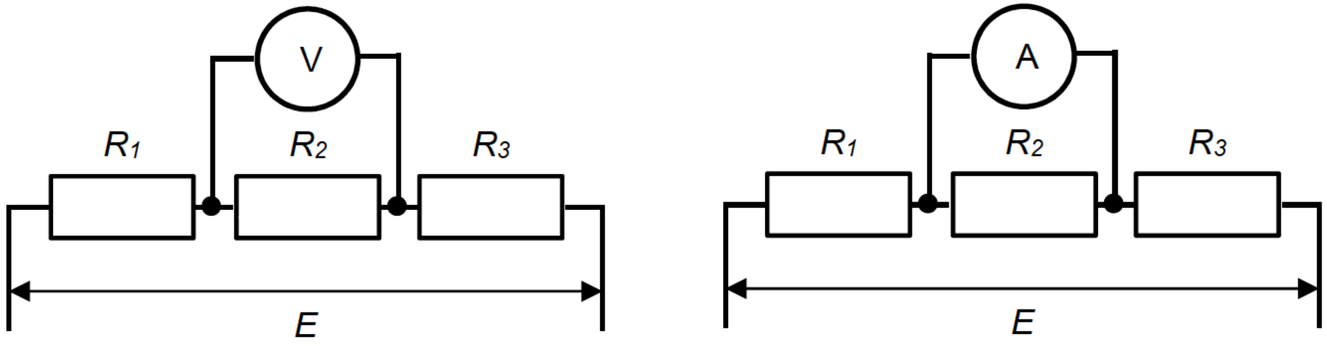

What will be the reading on an ideal ammeter if it is connected across R_2?

A 0.25 A **B** 0.50 A **C** 0.75 A **D** 1.5 A

23	**C**	When voltmeter connected, $I = \frac{5.0}{10} = 0.50$ A $E = 0.50 \times 30 \quad = 15$ V When ammeter is connected, R_2 will not have current passing through as ammeter has no resistance. Total resistance = 20 Ω $I = \frac{15}{20} = 0.75$ A

4 **(a)** A light-dependent resistor (LDR) with power rating 0.50 W is placed in parallel with a 600 Ω resistor and connected to a 12.0 V cell of internal resistance 30 Ω, as shown in Fig. 4.1.

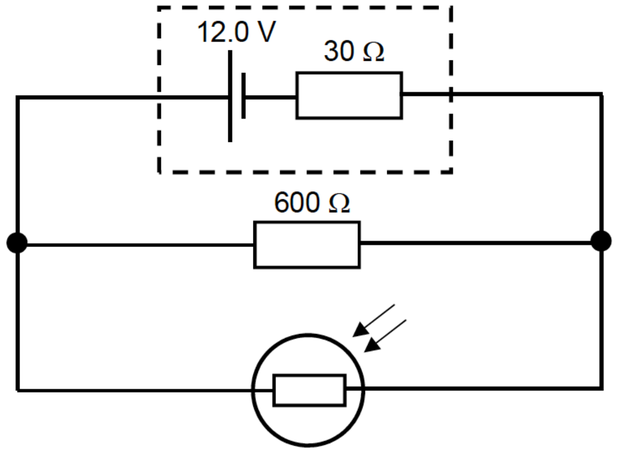

Fig. 4.1

(i) In conditions of low intensity light, the resistance of the LDR is 3000 Ω.

1. Show that the current through the LDR is 3.8 mA.

[2]

2. Hence or otherwise, determine the power dissipated in the LDR.

(ii) Accidentally, the LDR is exposed to sunlight and its resistance falls to 100 Ω. Discuss whether the LDR, which is marked 0.50 W, will be damaged.

.....

.....

..... [2]

(iii) The circuit in Fig. 4.1 is used to turn on a light bulb in conditions of low intensity light.

Draw on Fig. 4.1 where the light bulb should be placed in the circuit. Explain your answer.

.....

.....

.....

..... [2]

(b) Fig. 4.2 below shows a simplified structure of a silicon solar cell. When sunlight is incident on the top surface of the cell, loosely bound electrons are liberated, generating current flow to the external circuit.

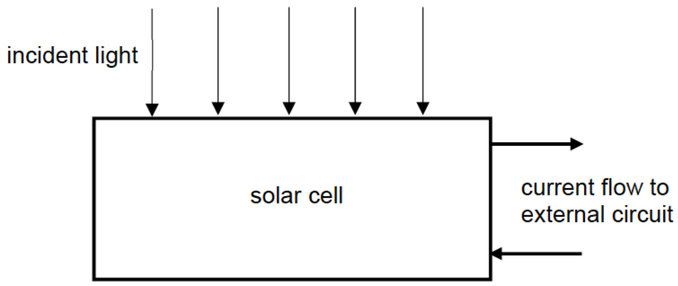

Fig. 4.3 shows the variation with terminal p.d. across the cell of output current for one such solar cell with sunlight of power 90 mW incident on it.

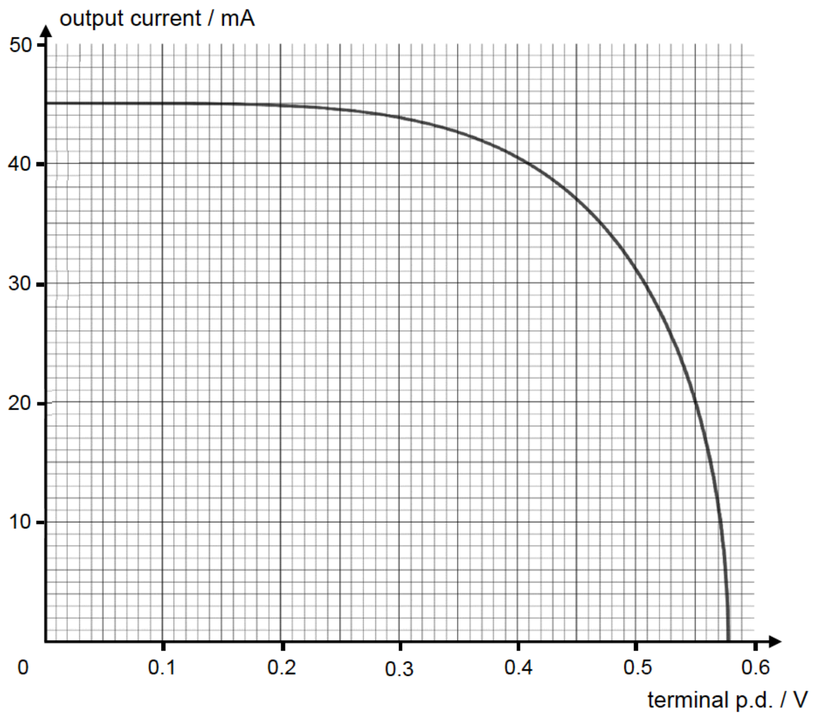

Fig. 4.3

(i) Draw a labelled diagram of an electrical circuit which could be used to obtain the graph in Fig. 4.3.

[2]

(ii) For the incident power of 90 mW, calculate

1. the e.m.f. of the solar cell *E*,

E = ... V [1]

2. the resistance of the external circuit *R* when the output current is 20 mA,

R = ... Ω [1]

3. the internal resistance of the cell *r* when the output current is 20 mA.

r = ... Ω [2]

4	
(a)(i)1.	effective resistance $= (\frac{1}{600} + \frac{1}{3000})^{-1} + 30$ $= 530\ \Omega$
	terminal p.d. $= \varepsilon - Ir$ $= 12.0 - (\frac{12.0}{530})(30)$ $= 11.3$ V $I_{LDR} = \frac{11.3}{3000}$ $= 3.37$ mA
	$= 3.8$ mA (2sf) (shown)
(a)(i)2.	$P_{LDR} = I_{LDR}{}^2 R$ $= (3.8 \times 10^{-3})^2 (3000)$
	$= 0.043$ W (2sf)
(a)(ii)	new effective resistance $= (\frac{1}{600} + \frac{1}{100})^{-1} + 30$ $= 116\ \Omega$

	new terminal p.d. $= \varepsilon - Ir$ $= 12.0 - (\frac{12.0}{116})(30)$ $= 8.90$ V
	new $P_{LDR} = \frac{V_{LDR}{}^2}{R}$ $= \frac{8.90^2}{100}$ $= 0.79$ W (2sf) Since $P_{LDR} > 0.50$ W, it will be damaged.
(a)(iii)	Light bulb drawn • in series with 600 Ω resistor OR • parallel to LDR and 600 Ω resistor.
	When light intensity is low, resistance of LDR is high. Total resistance in circuit will increase, leading to a smaller total current. This would lead to a smaller drop in p.d. across the internal resistance and a higher p.d. across light bulb.
(b)(i)	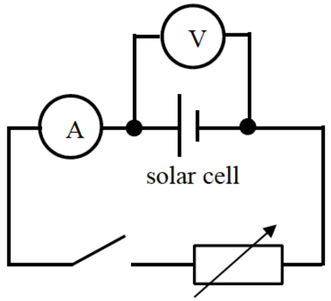 Solar cell, voltmeter and ammeter drawn and connected correctly. Variable resistor to vary resistance in circuit.
(b)(ii)1.	When output current is zero, output p.d. = E = 0.580 V
(b)(ii)2.	$R = \frac{V}{I}$ $= \frac{0.550}{20.0 \times 10^{-3}}$ $= 27.5\ \Omega$ (3sf)
(b)(ii)3.	$V = E - Ir$ $r = \frac{E - V}{I}$ $= \frac{0.580 - 0.550}{20.0 \times 10^{-3}}$
	$= 1.5\ \Omega$

2020 Prelim ASRJC

Three identical lamps P, Q and R are connected as shown in the diagram. Each lamp operates at normal brightness and the ammeter (of negligible resistance) registers a steady current.

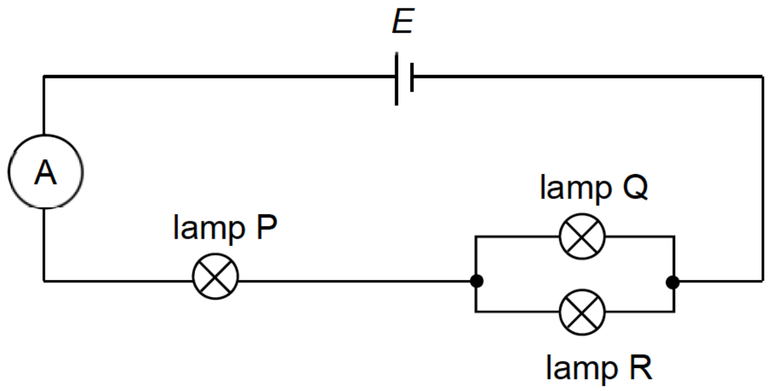

The filament of lamp Q breaks. What happens to the ammeter reading and the brightness of the remaining lamps?

	ammeter reading	brightness of lamp P	brightness of lamp R
A	increases	increases	decreases
B	increases	decreases	increases
C	decreases	increases	decreases
D	decreases	decreases	increases

23	**D** Effective resistance of the circuit increases when Bulb Q blows. Hence ammeter reading decreases. By PDP, the pd across P now decreases whereas pd across R increases, hence brightness of P decreases whereas R increases.

2020 Prelim ASRJC

24 A battery of e.m.f. 10 V with an internal resistance of 2.0 Ω delivers a current through a load.

What is the maximum power delivered to the load?

A 5.0 W **B** 12.5 W **C** 25.0 W **D** 50.0 W

24	**B** For maximum power to be delivered the value of the load resistor is equal to the internal resistance of the cell. i.e. $R = r = 2\ \Omega$

9749/02/ASRJC2020PRELIM

5

	$I = \frac{E}{R+r} = \frac{10.0}{4} = 2.5\ \text{A}$ $P = (2.5)^2 \times 2 = 12.5\ \text{W}$

2020 Prelim ASRJC

25 A battery of e.m.f. E and internal resistance r delivers a current I through a variable resistance R.

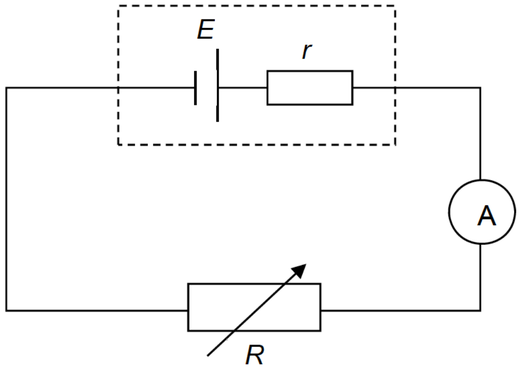

R is set at two different values and the corresponding currents I are measured using an ammeter of negligible resistance.

R / Ω	I / A
3.0	1.00
12.0	0.40

What is the value of the internal resistance r ?

A 1.3 Ω **B** 3.0 Ω **C** 6.0 Ω **D** 13.0 Ω

25 **B**

The potential difference across the resistance R is given as $V = IR$.

Hence, $IR = E - Ir$

From the data, we form two equations: $3.0 = E - 1.0\,r$ … (1)

$4.8 = E - 0.4\,r$ … (2)

Solving the equations simultaneously, $r = 3.0\ \Omega$ and $E = 6.0$ V

5 A circuit is set up as shown in Fig. 5.1. A cylindrical uniform resistance wire XY of length 1.20 m and resistivity $6.9 \times 10^{-7}\ \Omega\ \text{m}$ has resistance 7.5 Ω. Cell A has e.m.f. 2.0 V and internal resistance of 0.50 Ω. The current through cell A is I. Cell B has an e.m.f. E and internal resistance r.

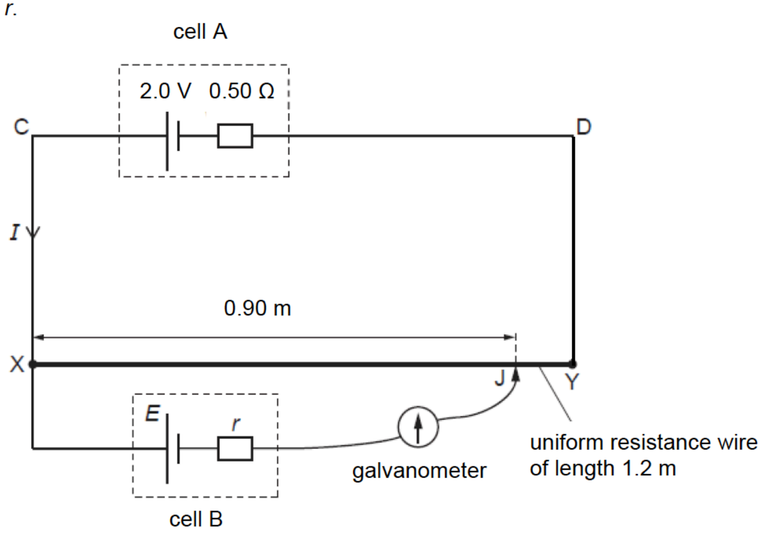

Fig. 5.1

The galvanometer shows no deflection when the movable connection J is adjusted so that the length XJ is 0.90 m.

(a) Show that, when the length XJ is 0.90 m, the current I is 0.25 A.

[1]

(b) **(i)** Determine the drift velocity of the electrons in the resistance wire XY given that the number density of the wire is $8.0 \times 10^{28}\ \text{m}^{-3}$.

drift velocity = ... m s^{-1} [3]

(ii) Explain the effect that stretching the wire will have on the drift velocity of electrons in the wire. Assume that the volume of the wire remains unchanged and that there is a constant potential difference across the wire.

.....

.....

..... [2]

(c) **(i)** Calculate the value of E.

E = ... V [2]

(ii) State and explain what happens to the balanced length XJ when the galvanometer used has resistance.

.....

.....

..... [1]

(iii) On Fig. 5.1, add a resistor to the circuit such that the balance length is increased.

[1]

[Total: 10]

2020 Prelim ASRJC

5a	Current = E / (R+r) = 2.0 / (7.5+0.5) = 0.25 A
bi	$I = Anvq$ $R = \rho L/A$ ➔ $A = (6.9 \times 10^{-7})(1.2) / 7.5 = 1.104 \times 10^{-7}$ $v = (0.25) / [(1.104 \times 10^{-7})(8.0 \times 10^{28})(1.6 \times 10^{-19})$ $= 1.77 \times 10^{-4}$ $= 1.8 \times 10^{-4}$ m s^{-1}
ii	Since volume remains unchanged, stretching the wire will reduce the cross sectional area but increasing the length since v [$= \frac{I}{Anq} = \frac{V}{RAnq} = \frac{V}{\frac{\rho L}{A}(Anq)} = \frac{V}{\rho Lnq}$] is inversely proportional to L, drift velocity decreases.
ci	$V_{XJ} = 0.25(7.5) \times (0.90/1.20)$ $= 1.4$ V

ii	Since there is no current flowing through the cell B at balanced length, the presence of the resistance in the galvanometer will have no effect on the balanced length
iii	The additional resistor is added **in series with cell A** or **parallel with resistance wire** in the primary circuit.

2020 Prelim CJC

23 A heater of resistance 5.0 Ω dissipates 125 W of power when current flows through it. The amount of energy converted to heat when 0.4 C of charge passes through it is

A 2 J **B** 10 J **C** 50 J **D** 625 J

23	A heater of resistance 5.0 Ω dissipates 125 W of power when current flows through it. The amount of energy converted to heat when 0.4 C of charge passes through it is							
	A	2 J	**B**	10 J	**C**	50 J	**D**	625 J
	Answer: B							

$$P = \frac{V^2}{R} \implies V^2 = 125 \times 5 \implies p.d\ across\ heater, V = \sqrt{625} = 25\ V$$

$$Since\ V = \frac{W}{Q} \implies Amount\ of\ energy\ conveted\ to\ heat, W = VQ = 25 \times 0.4 = 10\ J$$

5 **(a)** Define *potential difference* between two points in a circuit.

.....

.....

..... [1]

(b) A thermistor and a variable resistor are connected in a potential divider circuit as shown in Fig. 5.1.

The battery has an e.m.f. of E, the thermistor has a resistance R_T and the variable resistor has a resistance R_V.

This circuit is used to activate an alarm system whenever the ambient temperature rises to a certain value. The alarm bell will sound if the potential difference across it increases beyond the pre-set value.

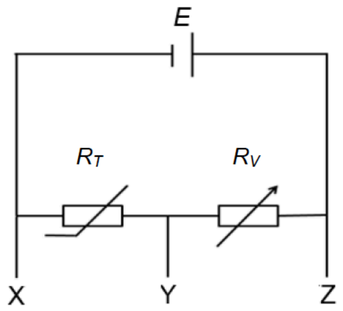

Fig. 5.1

(i) State an expression for the potential difference across the variable resistor in terms of E, R_T and R_V. [1]

(ii) State and explain across which two terminals, XY or YZ, the alarm bell should be connected to the circuit in Fig. 5.1.

.....

.....

.....

.....

..... [2]

(iii) State and explain the purpose of the variable resistor in the circuit.

.....

.....

.....

..... [2]

(c) Fig. 5.2 shows a potentiometer circuit consisting of a 100 cm length of wire AB and a driver cell E_1 of e.m.f. 2.0 V and of negligible internal resistance.

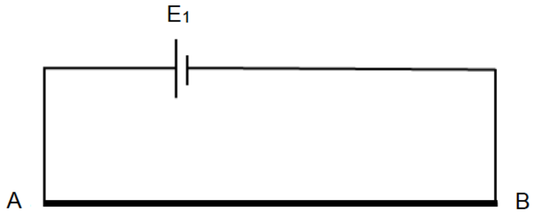

Fig. 5.2

(i) State the value of the potential gradient along AB.

potential gradient = ... V cm^{-1} [1]

(ii) A circuit consisting of a cell E_2 and a variable resistor R is now connected to the potentiometer as shown in Fig. 5.3.

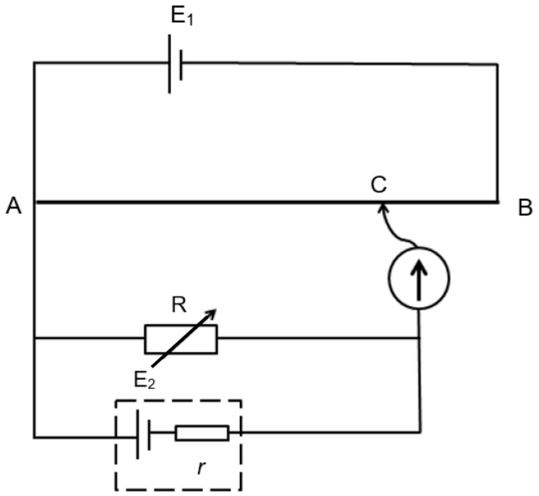

Fig. 5.3

5 (a) Define *potential difference* between two points in a circuit.

Solution:

It is the amount of electrical energy converted to other forms of energy per unit charge flowing between those two points in a circuit. 1

..... [1]

(b) A thermistor and a variable resistor are connected in a potential divider circuit as shown in Fig. 5.1.

The battery has an e.m.f. of E, the thermistor has a resistance R_T and the variable resistor has a resistance R_V.

This circuit is used to activate an alarm system whenever the ambient temperature rises to a certain value. The alarm bell will sound if the potential difference across it increases beyond the pre-set value.

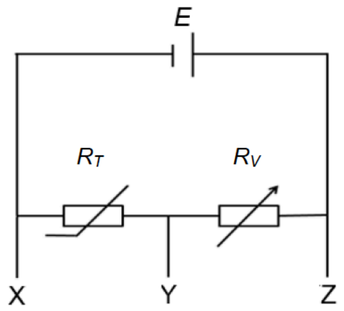

Fig. 5.1

(i) State an expression for the potential difference across the variable resistor in terms of E, R_T and R_V. [1]

Solution:

Let the current in the circuit be I

e.m.f. of cell $E = I(R_T + R) \rightarrow I = E / (R_T + R_V)$

p.d. across variable resistor $= I R_V = E [R_V / (R_T + R_V)]$

OR

By potential divider principle,

p.d. across variable resistor $= E [R_V / (R_T + R_V)]$

(ii) State and explain across which two terminals, XY or YZ, the alarm bell should be connected to the circuit in Fig. 5.1.

.....

Solution:

As the temperature increases, the resistance of the thermistor R_T decreases As R_T decreases, the potential difference across the variable resistor increases since p.d. across variable resistor $= I R_V = E R_V / (R_T + R_V)$ where E and R_V are constants. 1

Hence if the alarm bell is to be triggered when the p.d. across it goes beyond a particular value, the alarm should be connected across YZ (variable resistor). 1

..... [2]

(iii) State and explain the purpose of the variable resistor in the circuit.

Solution:

The variable resistor controls the temperature at which the alarm to be triggered. 1

The p.d. across the resistor depends on the resistance of the variable as well as that of the thermistor. By changing its resistance, it allows the p.d. across it to reach the triggering value at other temperatures when the thermistor reaches a different temperature. 1

[2]

(c) Fig. 5.2 shows a potentiometer circuit consisting of a 100 cm length of wire AB and a driver cell E_1 of e.m.f. 2.0 V and of negligible internal resistance.

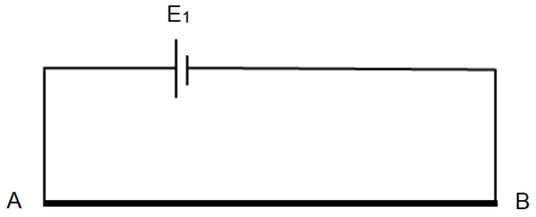

Fig. 5.2

(i) State the value of the potential gradient along AB.

Solution:

Potential gradient = 2.0 / 100 = 0.020 V cm^{-1}

potential gradient = ... V cm^{-1} [1]

(ii) A circuit consisting of a cell E_2 and a variable resistor R is now connected to the potentiometer as shown in Fig. 5.3.

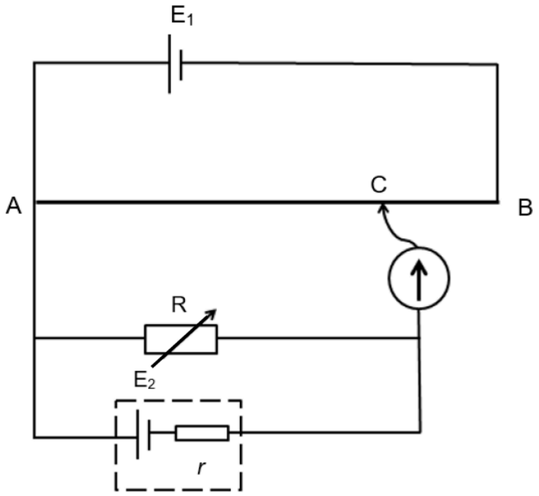

Fig. 5.3

The resistance of R is set to 10.0 Ω and the sliding contact C is adjusted until there is no current flowing in the galvanometer. The length AC is found to be 60.0 cm.

The resistance of R is now set to 3.0 Ω and the experiment is repeated. The length AC is now 54.0 cm.

Calculate the e.m.f. and internal resistance *r* of cell E_2.

e.m.f. of cell E_2 = ... V

internal resistance of cell E_2 = ... Ω [5]

The resistance of R is set to 10.0 Ω and the sliding contact C is adjusted until there is no current flowing in the galvanometer. The length AC is found to be 60.0 cm.

The resistance of R is now set to 3.0 Ω and the experiment is repeated. The length AC is now 54.0 cm.

Calculate the e.m.f. and internal resistance *r* of cell E_2.

Solution:

p.d. across AB = e.m.f. of E_1 = 2.0 V

When resistance of R = 10.0, balance length = 60.0 cm
p.d. across AC = potential gradient x 60.0 = 0.020 x 60.0 = 1.2 V

p.d. across R = E_2 x 10.0 / (10.0 + r)

At balance length, p.d. across R = p.d. across AC
E_2 x 10.0 / (10.0 + r) = 1.2 ……..(1)

When resistance of R = 3.0, balance length = 54.0 cm
p.d. across AC = potential gradient x 54.0 = 0.020 x 54.0 = 1.08 V

p.d. across R = E_2 x 3.0 / (3.0 + r)

At balance length, p.d. across R = p.d. across AC
E_2 x 3.0 / (3.0 + r) = 1.08 ……..(2)

(1) / (2)
(10.0 /3.0) x [(3.0 + r) / (10.0 + r)] = 1.2 / 1.08
r = 0.5 Ω

subtitute r = into (1)
E_2 = 1.26 V

e.m.f. of cell E_2 = …….. V

internal resistance of cell E_2 = …….. Ω [5]

2020 Prelim DHS

24 In the circuit below, the reading V_T on the voltmeter changes from high to low as the temperature of the thermistor changes. The reading V_L on the voltmeter changes from high to low as the level of light on the light-dependent resistor (LDR) changes.

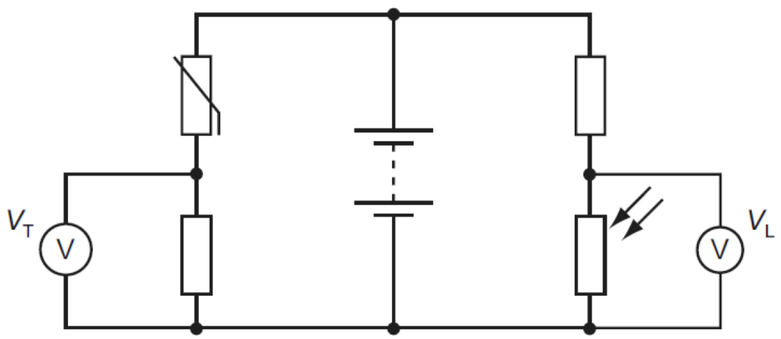

The readings on V_T and V_L are both high.

What are the conditions of temperature and light level?

	temperature	light level
A	low	low
B	low	high
C	high	low
D	high	high

Ans C

6 In the circuit shown in Fig. 6.1, cell A has a constant e.m.f. of 2.0 V and negligible internal resistance. Wire XY is 100 cm long with a resistance of 5.0 Ω. Cell B has an e.m.f. of 1.5 V and an internal resistance of 0.80 Ω.

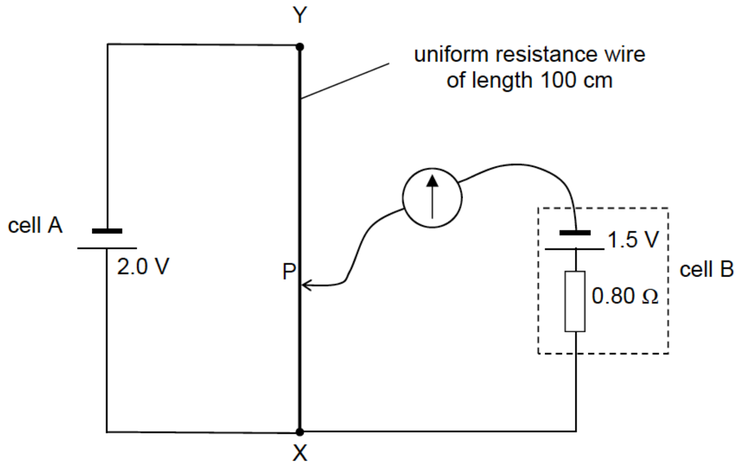

Fig. 6.1

Calculate the length XP to produce zero current in the galvanometer

(a) in the circuit as shown in Fig. 6.1,

XP = ... cm [2]

(b) when a 1.0 Ω resistor is placed in series with cell A,

XP = ... cm [3]

(c) when the 1.0 Ω resistor in **(b)** is removed from A and placed in parallel with cell B.

XP = ... cm [3]

6	**(a)** p.d. per unit length = V_{XY} / 100 = 2.0/100 = 0.020 V cm^{-1}	C1
	XP = 1.50/0.020 = 75 cm	A1
	(b) V_{XY} = (5.0/6.0) (2.0 V) = 5/3 V	C1
	p.d. per unit length = V_{XY} / 100 = (5/3)/100 = 0.017 V cm^{-1}	C1
	XP = 1.50/0.017 = 90 cm	A1
	9	
	(c) terminal p.d. of cell B = 1.50 – (1.50/1.80)(0.80) or $[1.0/(1.0+0.80)](1.5)$	C1
	= 0.833 V	C1
	XP = 0.833/0.020 = 41.7 cm	A1

Comments: Some found this question challenging. The difficulties they experienced were in calculating voltage per unit of length of wire XY and identifying the p.d. across XP.

2020 Prelim EJC

21 The diagram shows a circuit for measuring a small e.m.f. of 6.0 mV produced by a thermocouple. There is zero current in the galvanometer when the variable resistor is set to 3.0 Ω.

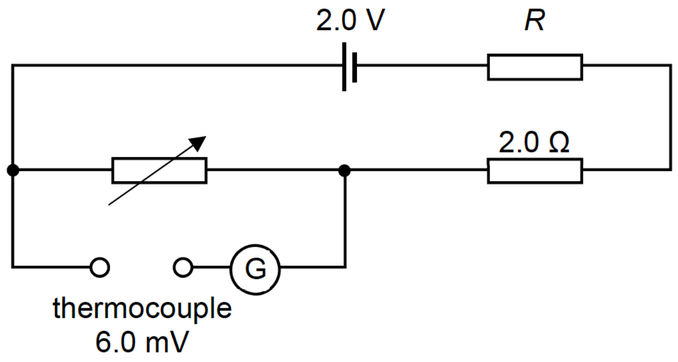

What is the resistance *R*?

A 667 Ω
B 995 Ω
C 1100 Ω
D 1662 Ω

21 by potential divider rule

$$\frac{3}{3+2+R} = \frac{6\times10^{-3}}{2}$$

$$R = 995\ \Omega$$

2020 Prelim EJC

22 A resistor of resistance R has power P when the current in the resistor is I.

What is the resistance of a resistor that has power $2P$ when the current in the resistor is $\frac{I}{2}$?

A $\frac{R}{8}$

B $\frac{R}{4}$

C $4R$

D $8R$

22

$P = i^2R$

$R = \frac{P}{I^2}$

$$\frac{R_{new}}{R} = \frac{\frac{2P}{(I \div 2)^2}}{\frac{P}{I^2}} = 8$$

2020 Prelim EJC

23 A light-dependent resistor (LDR) is connected in series with a fixed resistor of resistance R and a 10 V power supply shown below. At a particular light intensity, the resistance of the LDR is 5.3 Ω and the potential difference V_{LDR} across it is 4.5 V.

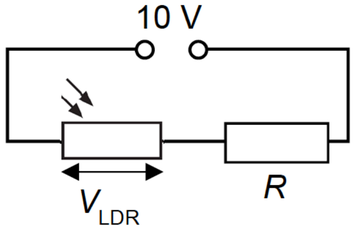

What is V_{LDR} if the light intensity is increased such that the resistance of the LDR is 3.1 Ω?

A 1.5 V
B 2.6 V
C 3.2 V
D 3.5 V

23 Initially:

$$I = \frac{V_{LDR}}{r_{LDR}} = \frac{4.5}{5.3}$$

$$V_R = 10 - 4.5 = 5.5 \text{ V}$$

$$R = \frac{V_R}{I} = \frac{5.5}{4.5 \div 5.3} = 6.48\ \Omega$$

by potential divider rule:

$$\frac{V_{LDR}}{\text{e.m.f.}} = \frac{r_{LDR}}{r_{LDR} + R}$$

$$V_{LDR} = (\text{e.m.f.})\frac{r_{LDR}}{r_{LDR} + R}$$

$$= (10)\left(\frac{3.1}{3.1 + 6.48}\right)$$

$$= 3.2 \text{ V}$$

5 **(a)** A battery with internal resistance r is connected to an ideal ammeter, as shown in Fig. 5.1.

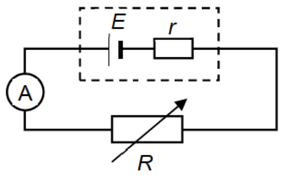

Fig. 5.1

Fig. 5.2 shows the variation of current I in the circuit with potential difference V across the variable resistor R.

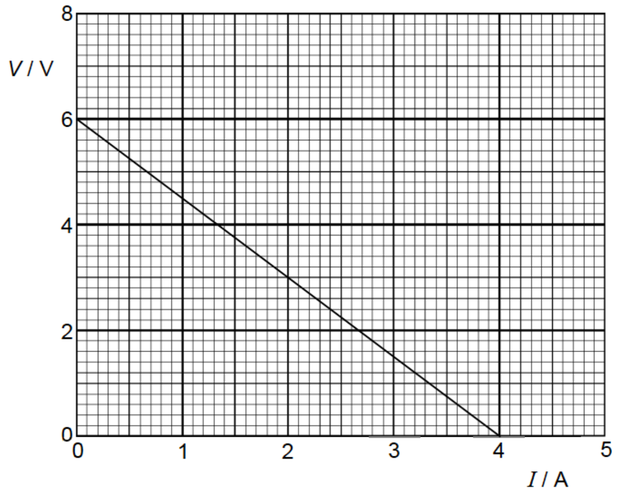

Fig. 5.2

(i) Define *potential difference*.

.....

.....

..... [1]

(ii) **1.** With reference to Fig. 5.2, express V in terms of I.

[1]

2. Hence, state the e.m.f. of the battery E and the internal resistance r.

E = ... V [1]

r = ... Ω [1]

(iii) When the current in the variable resistor R is 0.40 A, calculate the

1. resistance of the variable resistor R.

R = ... Ω [1]

2. power dissipated in the variable resistor R..

power = ... W [1]

(b) A cylindrical metal case of diameter 15 cm and a metal rod of diameter 1.5 cm are fixed to an insulating base as shown in Fig. 5.3. A conducting liquid fills the cylindrical metal case to a depth of 5.0 cm.

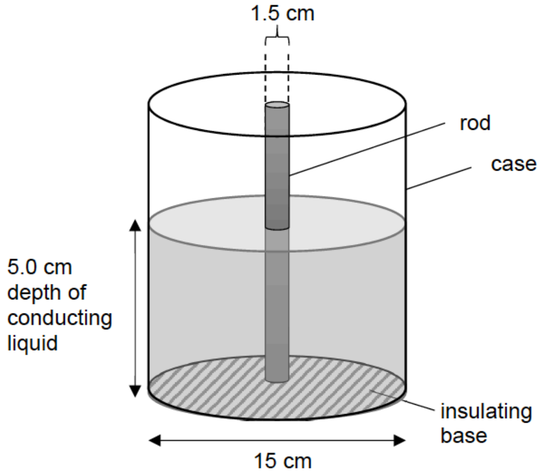

Fig. 5.3

A potential difference is applied between the metal rod and the metal cylindrical case.

For the charge carriers, find the ratio of

$$\frac{\text{drift velocity at surface of rod}}{\text{drift velocity at inner surface of case}}$$

ratio = ... [2]

[Total: 8]

2020 Prelim EJC

5(a)(i)	work done per unit charge where electrical energy is converted into other forms of energy as the charge passes from one point to another	B1
5(a)(ii)1.	$V = -1.5I + 6$	B1
5(a)(ii)2.	E = 6.0 V r = 1.5 Ω	A1 A1
5(a)(iii)	$R = \frac{V}{I} = \frac{5.4}{0.4} = 13.5\ \Omega$ $P = Vi = (5.4)(0.4) = 2.16\ \text{W}$	A1 A1
5(b)	$I = nAvq$ $\frac{I}{nq} = \text{constant} = Av$ $A_1v_1 = A_2v_2$ $\frac{v_{rod}}{v_{case}} = \frac{A_{case}}{A_{rod}} = \frac{h(\text{circumference of case})}{h(\text{circumference of rod})} = \frac{\pi d_{case}}{\pi d_{rod}}$ $= \frac{15}{1.5} = 10$	M1 A1

2020 Prelim JPJC

21 The diagram shows four identical lamps connected in a circuit with a power supply.

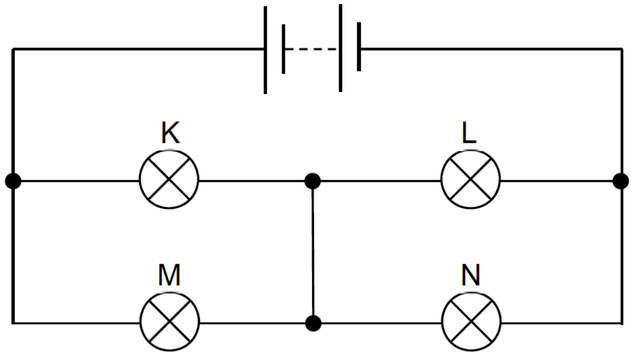

What happens when the filament of lamp K breaks?

A Lamp M will not light up.

B Lamp L will be brighter than before.

C Lamp M will be brighter than before.

D Lamp L and N will remain as bright as before.

21 Let the e.m.f. of the power supply be E, and the resistance of each lamp be R.

Before filament of lamp K breaks:

p.d. across each lamp $= \frac{E}{2}$

Power dissipated in each lamp $= \frac{(E/2)^2}{R} = \frac{E^2}{4R}$

After filament of lamp K breaks:

p.d. across lamp M $= \frac{2E}{3}$

p.d. across lamp L and N $= \frac{E}{3}$

Power dissipated in lamp M $= \frac{(2E/3)^2}{R} = \frac{4E^2}{9R}$

Power dissipated in lamps L and N $= \frac{(E/3)^2}{R} = \frac{E^2}{9R}$

Therefore lamp M has become brighter, and lamps L and N has become dimmer.

Answer: C

2020 Prelim JPJC

22 In the circuit shown, all the resistors have the same resistance, and all the ammeters have negligible resistance.

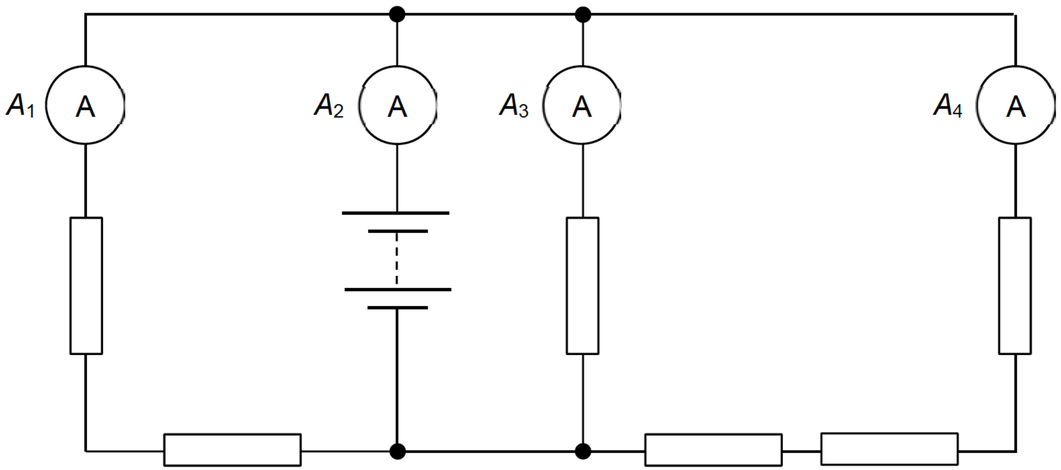

The reading A_1 is 0.6 A.

What are the readings on the other ammeters?

	A_2 / A	A_3 / A	A_4 / A
A	1.0	0.3	0.1
B	1.4	0.6	0.2
C	1.8	0.9	0.3
D	2.2	1.2	0.4

22 Compare left branch and centre branch: Reading $A_3 = 2(0.6) = 1.2$ A

Compare centre branch and right branch: Reading $A_4 = \frac{1.2}{3} = 0.4$ A

Current from battery: $A_2 = 0.6 + 1.2 + 0.4 = 2.2$ A

Answer: D

6 Fig. 6.1 shows a resistor network connected to a 12 V battery of negligible internal resistance. A voltmeter of resistance 6.0 kΩ is connected in parallel across the 200 Ω resistor. When the light intensity is varied, the resistance of the light-dependent resistor (LDR) ranges from 120 Ω to 500 Ω.

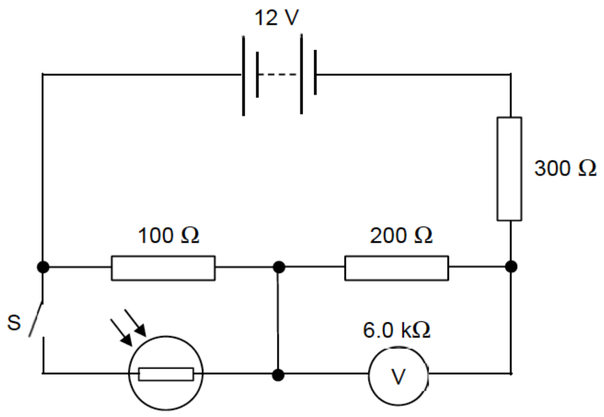

Fig. 6.1

(a) Switch S is open.

(i) Calculate the total resistance of the circuit.

total resistance = ... Ω [2]

(ii) Calculate the current from the battery.

current = ... A [1]

(iii) Hence or otherwise show that the reading on the voltmeter is 3.9 V.

[2]

(b) Switch S is now closed. The light intensity is at a maximum.

Calculate the power supplied to the 200 Ω resistor.

power = ... W [3]

6(a)(iii)	Effective resistance of 200 Ω resistor and voltmeter $= \frac{200 \times 6000}{200 + 6000} = 193.548\ \Omega$ Voltmeter reading $= \left(\frac{193.548}{100 + 193.548 + 300}\right) 12$ $= 3.913\ \text{V}$ $\approx 3.9\ \text{V}$ OR Voltmeter reading $= (0.020217)(193.548)$ $= 3.913\ \text{V}$ $\approx 3.9\ \text{V}$	[1] for effective resistance [1] for correct substitution
6(b)	With light intensity at a maximum, the resistance of the LDR is 120 Ω. Effective resistance of 100 Ω resistor and LDR $= \frac{100 \times 120}{100 + 120} = 54.545\ \Omega$ p.d. across 200 Ω resistor $= \left(\frac{193.548}{54.545 + 193.548 + 300}\right) 12$ $= 4.238\ \text{V}$ Power supplied to 200 Ω resistor $= \frac{4.238^2}{200}$ $= 0.0898\ \text{W}$ $\approx 0.090\ \text{W}$	[1] for p.d. across 200 Ω resistor [1] for correct substitution [1] for correct answer

5 **(a)** Using energy considerations, distinguish between electromotive force (e.m.f.) and potential difference (p.d.).

.....

.....

..... [2]

(b) Fig. 5.1 shows a temperature probe which is used to detect changes in temperature in the range of 5.0 °C to 35.0 °C. A battery of e.m.f. 9.0 V and negligible internal resistance is connected in series with a thermistor and a 5.0 kΩ resistor. The thermistor is represented by the dashed box. An ideal voltmeter measures the p.d. across the resistor. Fig. 5.2 shows the characteristic curve of the thermistor.

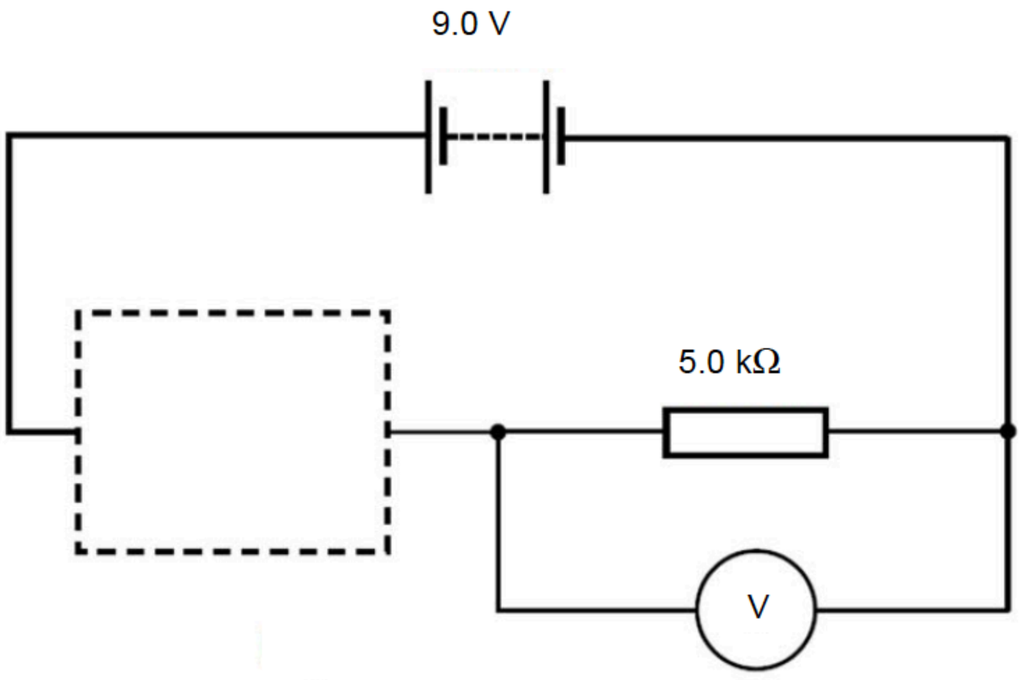

Fig. 5.1

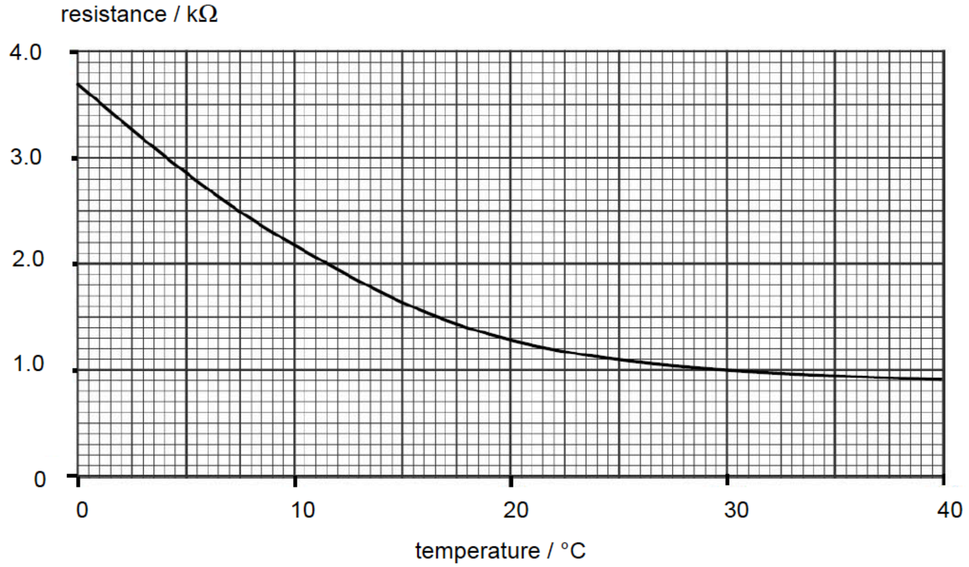

Fig. 5.2

(i) In Fig. 5.1, complete the circuit by drawing the symbol for the thermistor in the dashed box. [1]

(ii) Using Fig. 5.2, show that the reading on the voltmeter is 5.7 V when the temperature is 5.0 °C.

[2]

(iii) The voltmeter has a range of 0 V to 20 V and a precision of 0.1 V. When the temperature of the thermistor is 35.0 °C, the voltmeter reads 7.6 V.

State and explain a disadvantage of using this temperature probe to detect changes in temperatures in the range of 5.0 °C to 35.0 °C.

.....

.....

..... [2]

5 **(a)** Using energy considerations, distinguish between electromotive force (e.m.f.) and potential difference (p.d.).

5(a)	E.m.f. is the work done/energy required to move a unit charge around a complete circuit and in the process, non-electrical energy is converted to electrical energy. Potential difference is the work done/energy required to move a unit charge across a component and in the process, electrical energy is converted to non-electrical forms.	[1] correct definition [1] correct definition	
5(b)(i)		[1] correct symbol	

.... [2]

(b) Fig. 5.1 shows a temperature probe which is used to detect changes in temperature in the range of 5.0 °C to 35.0 °C. A battery of e.m.f. 9.0 V and negligible internal resistance is connected in series with a thermistor and a 5.0 kΩ resistor. The thermistor is represented by the dashed box. An ideal voltmeter measures the p.d. across the resistor. Fig. 5.2 shows the characteristic curve of the thermistor.

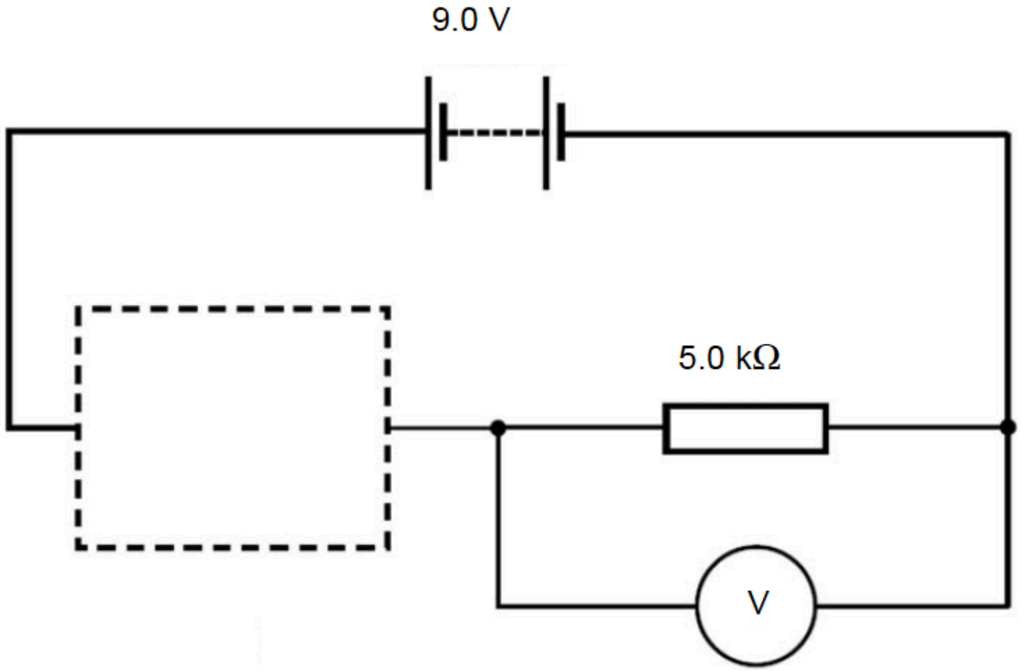

Fig. 5.1

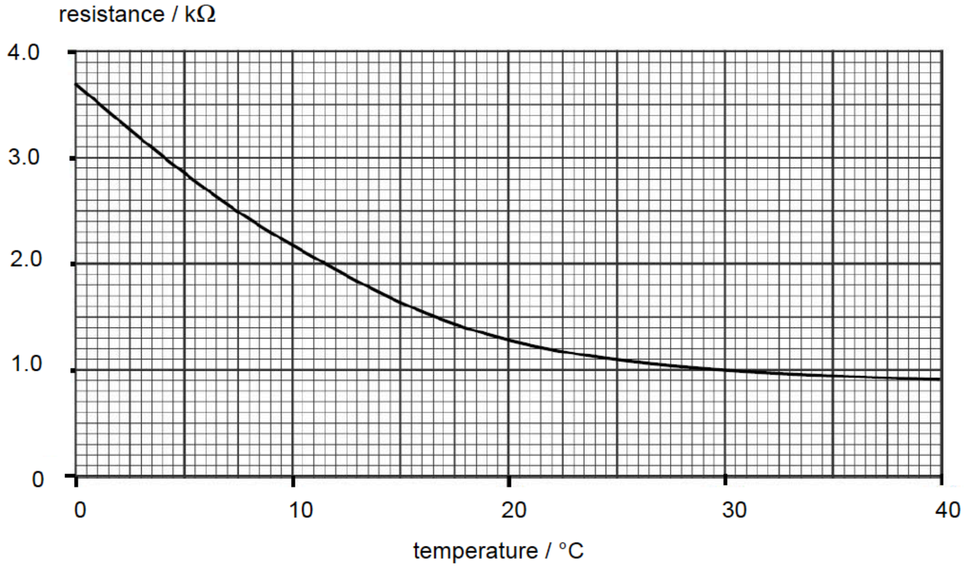

Fig. 5.2

(i) In Fig. 5.1, complete the circuit by drawing the symbol for the thermistor in the dashed box. [1]

(ii) Using Fig. 5.2, show that the reading on the voltmeter is 5.7 V when the temperature is 5.0 °C.

5(b)(ii)	At, temperature of 5 ° C, resistance of thermistor is 2.85 kΩ By potential divider principle, $V = \frac{5}{5+2.85} \times 9$ $= 5.7\,V$	[1] correct resistance reading from graph [1] answer
5(b)(iii)	The temperature probe is not sensitive to changes in temperatures between 5 °C to 35 °C, especially in the range of 30 °C to 35 °C As the voltmeter has a precision of 0.1 V, the change in potential difference due to changes in resistance from 30 °C to 35 °C will not be able to be measured by the voltmeter.	[1] correct range mentioned [1] voltmeter precision

[2]

(iii) The voltmeter has a range of 0 V to 20 V and a precision of 0.1 V. When the temperature of the thermistor is 35.0 °C, the voltmeter reads 7.6 V.

State and explain a disadvantage of using this temperature probe to detect changes in temperatures in the range of 5.0 °C to 35.0 °C.

.....

.....

..... [2]

2020 Prelim MI

22 The diagram below shows a potentiometer circuit used to determine the internal resistance *r* of a cell of e.m.f. *E*. The driver cell has an e.m.f. of 2.0 V with negligible internal resistance and the resistance wire PQ is 1.0 m long. The cell is connected in parallel with a resistor of 2.0 Ω. When the switch is open, the balance length is 0.70 m and when the switch is closed, the balance length is 0.50 m.

What is the value of *r*?

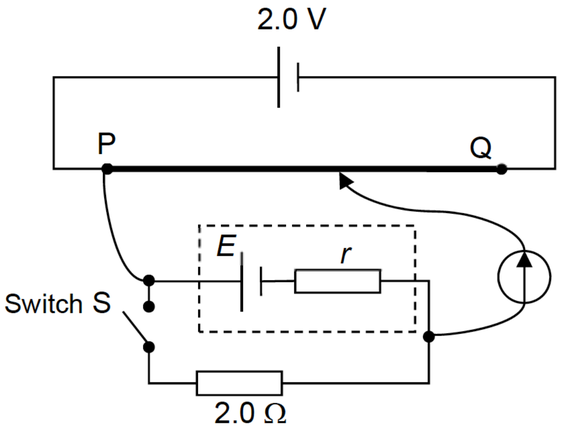

A 0.15 Ω **B** 0.40 Ω **C** 0.50 Ω **D** 0.80 Ω

22 **D**

When the switch is open, at balance position, there is no current passing through the unknown emf cell.

$$E = \frac{0.70}{1.0} \times 2.0 = 1.4\ \text{V}$$

When switch is closed, at balance position, there is current flowing in the secondary circuit below.

$$E - Ir = \frac{0.50}{1.0} \times 2.0$$

$$1.4 - \left(\frac{1.4}{2.0 + r}\right) r = 1.0$$

$$r = 0.80\ \Omega$$

4 **(a)** Explain what is meant by *internal resistance* of a battery?

.....

..... [1]

(b) Fig. 4.1 and Fig. 4.2 shows two circuits X and Y that are used by a student to test a battery of **three** identical cells. In circuit X there is no load resistor. In circuit Y, a load resistor is connected. You can assume that all the meters in the circuits are ideal. The reading of the meters are as shown in the diagrams.

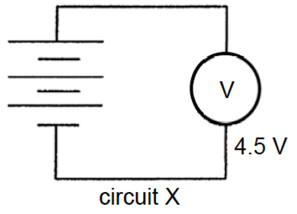

Fig. 4.1

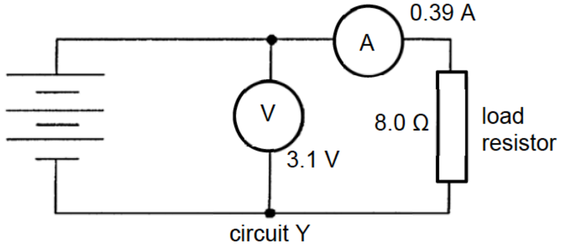

Fig. 4.2

(i) Explain why there is a difference between the voltmeter readings recorded in the two circuits.

.....

..... [1]

(ii) Calculate the internal resistance of a *single* cell.

internal resistance = ... Ω [2]

(iii) When one of the cells in the battery is *reversed* in circuit Y, determine the new reading on the ammeter.

reading on ammeter = ... A [1]

(c) A battery of e.m.f. 10 V with negligible internal resistance is connected to a light dependent resistor (LDR), and a potentiometer wire *XY* of length 1.20 m and resistance 1.5 kΩ, as shown in Fig. 4.3. When the circuit is placed in normal light, the resistance of the LDR is 2.0 kΩ. There is a battery of unknown e.m.f. *E* and negligible resistance, and other resistors in the circuit.

An ammeter is connected to a point on the potentiometer wire *XY* using a jockey. When the jockey is at point *Z*, the ammeter registers a reading of zero.

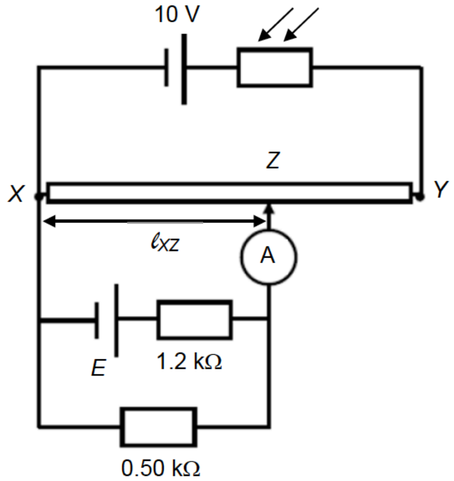

Fig 4.3

(i) Calculate the potential difference across the potentiometer wire XY.

potential difference = ... V [1]

(ii) Given that the balanced length of potentiometer wire ℓ_{XZ} is 0.45 m, determine the unknown e.m.f *E*.

unknown e.m.f. *E* = ... V [3]

2020 Prelim MI

(iii) If the circuit is moved into the dark, state and explain the change (if any) to the balanced length ℓ_{XZ}.

.....

.....

.....

.....

..... [2]

[Total: 11]

4	**(a)**		It is the resistance inside the battery due to the internal composition of battery.	B1
	(b)	**(i)**	Voltmeter in circuit X measures the e.m.f. while voltmeter in circuit Y measures the terminal potential. (or, mention of potemtial drop / energy dissipation across the internal resistance of batteries in circuit Y)	B1
		(ii)	For circuit Y, $E = V + Ir$ $4.5 = 3.1 + 0.39\,r$ $r = 3.6\ \Omega$ hence, internal resistance for each cell =3.6/3 = 1.2 Ω	C1 A1
		(iii)	in circuit Y, Resistance unchanged = 8.0 + 3.6 = 11.6 Ω Effective emf = 1.5 V Hence new current = 1.5/11.6 = 0.129 A	 A1
	(c)	**(i)**	$V_{XY}' = \frac{1.5k}{1.5k + 2.0k}(10) = 4.2857 \approx 4.29$ V	A1
		(ii)	$\frac{\ell_{XZ}}{\ell_{XY}} = \frac{V_{XZ}}{V_{XY}'}$ V_{xz} = (0.45/1.2) (4.2857) = 1.60714 V 1.60714 = [0.5 / (0.5 + 1.2)] x E E = 5.4643 ≈ 5.47 V	C1 M1 A1
		(iii)	When in dark, the resistance of LDR increases and the p.d. across XY decreases. V_{xz} remains unchanged. Since $\ell_{XZ} = \frac{V_{XZ}}{V_{XY}}\ell_{XY}$, then ℓ_{XZ} increases since V_{XY} ***de***creases.	M1 A1

2020 Prelim JPJC